ELECTRICAL SCHEMATIC – 10HP -SUBMERSIBLE

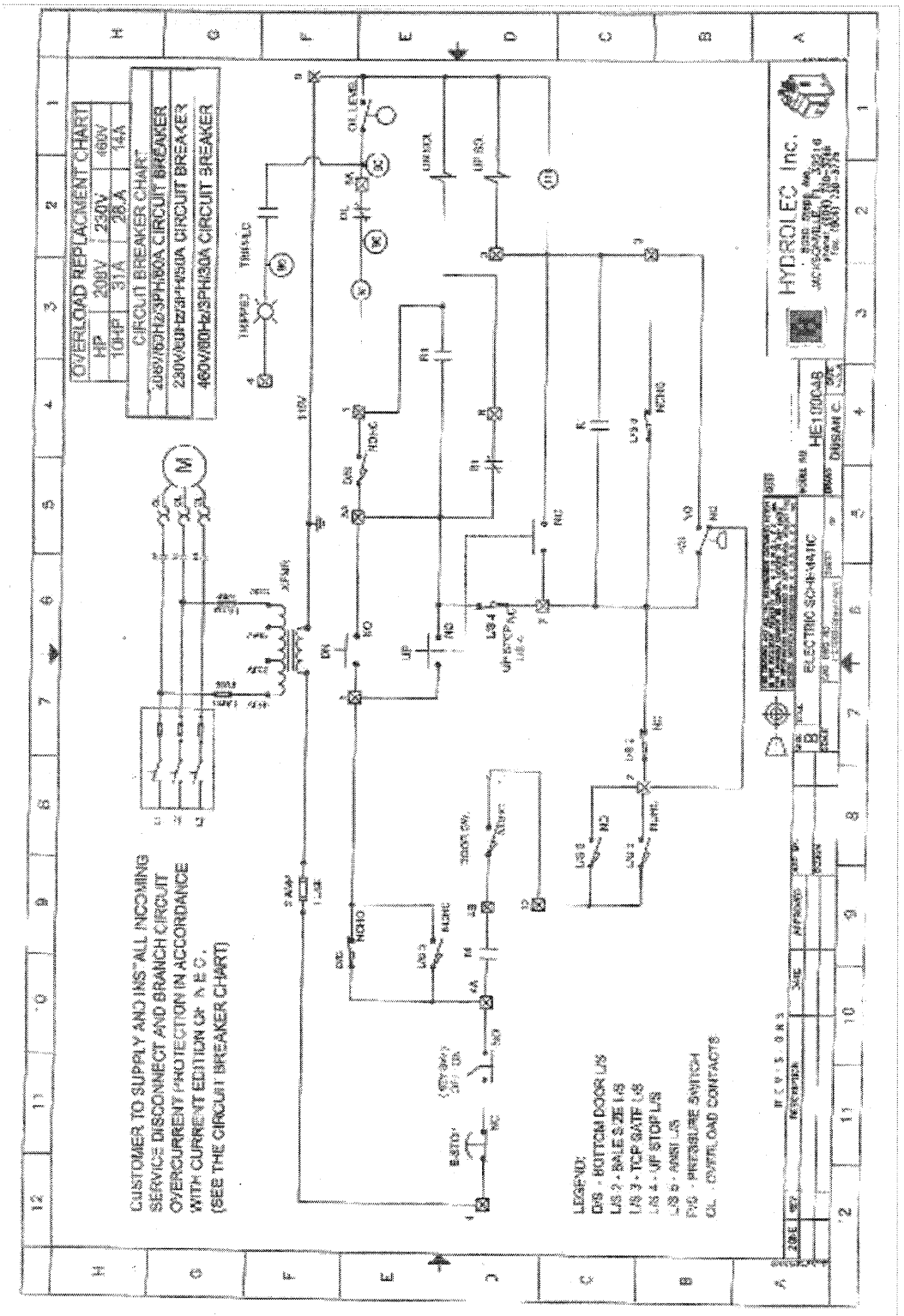

Sorry - Very poor copy